Cambridge Assessment International Education

Cambridge IGCSE™

CANDIDATE NAME	

CENTRE NUMBER						CANDIDATE NUMBER					

1797213504

BIOLOGY **0610/42**

Paper 4 Theory (Extended) **May/June 2022**

1 hour 15 minutes

You must answer on the question paper.

No additional materials are needed.

INSTRUCTIONS

- Answer **all** questions.
- Use a black or dark blue pen. You may use an HB pencil for any diagrams or graphs.
- Write your name, centre number and candidate number in the boxes at the top of the page.
- Write your answer to each question in the space provided.
- Do **not** use an erasable pen or correction fluid.
- Do **not** write on any bar codes.
- You may use a calculator.
- You should show all your working and use appropriate units.

INFORMATION

- The total mark for this paper is 80.
- The number of marks for each question or part question is shown in brackets [ ].

This document has **20** pages. Any blank pages are indicated.

DC (RW/SW) 302038/4
© UCLES 2022

www.root19.com +91 - 9969 353 391

1 Fig. 1.1 shows a spongy mesophyll cell from the leaf of a plant. The arrows show the net direction of movement of carbon dioxide molecules during daylight.

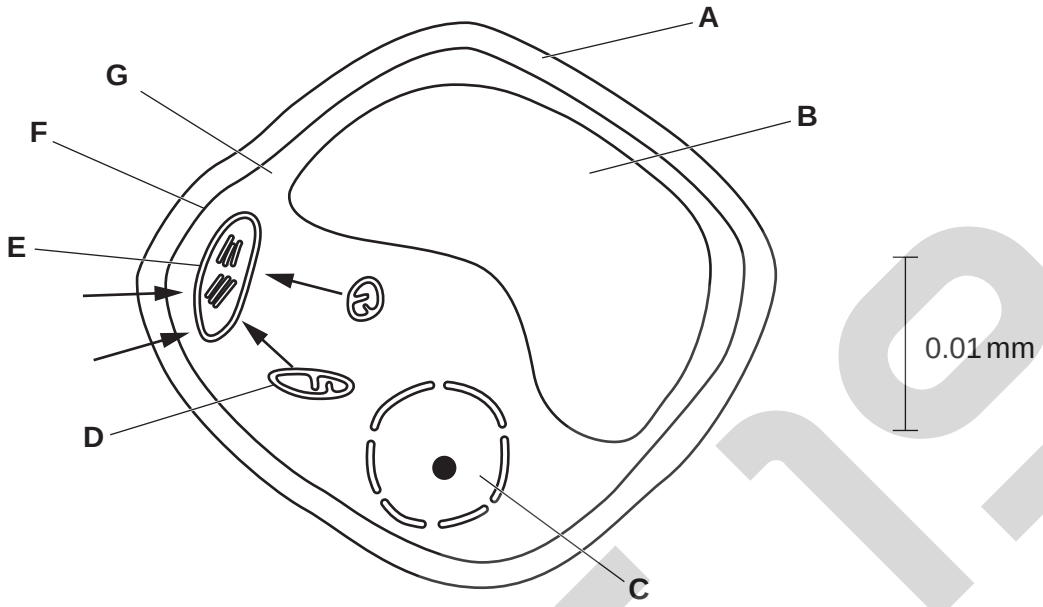

Fig. 1.1

(a) The scale bar in Fig. 1.1 represents 0.01 mm.

Convert 0.01 mm to micrometres.

..... μm [1]

(b) Table 1.1 shows:

- the functions of some of the structures in plant cells
- some of the names of the structures where these functions occur
- some of the letters that label these structures in Fig. 1.1.

Complete Table 1.1.

Table 1.1

function	structure	letter in Fig. 1.1
	nucleus	
	chloroplast	
aerobic respiration		
contains cell sap and stores water		
		A

[5]

www.root19.com +91 - 9969 353 391

(c) Carbon dioxide is a raw material for photosynthesis.

(i) State the process by which carbon dioxide travels into the leaf from the air.

..... [1]

(ii) Describe the pathway taken by a molecule of carbon dioxide, from the air outside a leaf to a spongy mesophyll cell.

.....

.....

.....

.....

..... [2]

(d) Low concentrations of carbon dioxide in the air may restrict the rate of photosynthesis in plants.

(i) State the term given to something present in the environment in such short supply that it restricts life processes.

..... [1]

(ii) State **one** other feature of the environment that may also restrict the rate of photosynthesis.

..... [1]

(e) Researchers have devised a process of artificial photosynthesis. They use gold nanoparticles as a catalyst to utilise green light to convert carbon dioxide to fuels, such as propane.

Suggest the advantages to the environment of using artificial photosynthesis on a large scale.

.....

.....

.....

.....

..... [2]

[Total: 13]

© UCLES 2022

www.root19.com +91 - 9969 353 301

2 The kidneys filter blood, separate useful molecules from excretory wastes and control the water content of the blood.

Fig. 2.1 is a diagram of a kidney tubule and associated blood vessels. The arrows show the direction of blood flow.

Fig. 2.2 is a drawing of a vertical section through a cell from the lining of region 2 of the tubule.

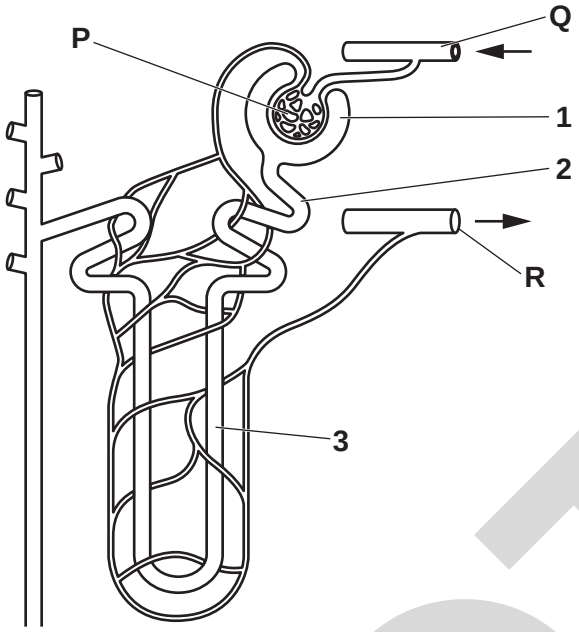

Fig. 2.1

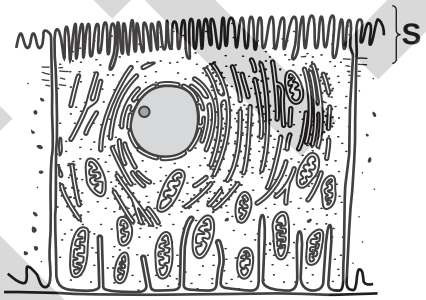

Fig. 2.2

(a) **(i)** State the name of structure **P**.

..... [1]

(ii) Blood vessel **Q** has the highest blood pressure.

Suggest why.

.....

.....

..... [1]

(iii) The structures labelled **S** on Fig. 2.2 are microvilli.

Explain the importance of the microvilli on the surface of these cells.

.....

.....

.....

.....

..... [2]

(b) Table 2.1 shows the concentrations of some substances in blood plasma and in the regions labelled 1 and 3 on the tubule shown in Fig. 2.1.

Table 2.1

substance	concentration / mg per cm^3		
	blood plasma	region 1	region 3
protein	8000	0	0
glucose	100	100	0
salts	320	320	300
urea	30	30	2000

Outline how the kidney tubules function to produce urine from the substances in blood plasma.

Use the information in Fig. 2.1, Fig. 2.2 and Table 2.1 to support your answer.

.....

.....

.....

.....

.....

.....

.....

.....

.....

.....

.....

.....

..... [6]

www.root19.com +91 - 9969 353 301

(c) The kidneys are examples of organs that help the body to maintain a constant internal environment.

(i) State the term for maintaining a constant internal environment by negative feedback.

..... [1]

(ii) Explain how negative feedback controls the blood glucose concentration of a person who has **not** eaten for a day.

.....

.....

.....

.....

.....

.....

..... [3]

[Total: 14]

© UCLES 2022

www.root19.com
+91 - 9969 353 391

3 The eye is adapted for focusing on near and distant objects.

Fig. 3.1 shows the parts of the eye involved in focusing. The eye is focused on a distant object.

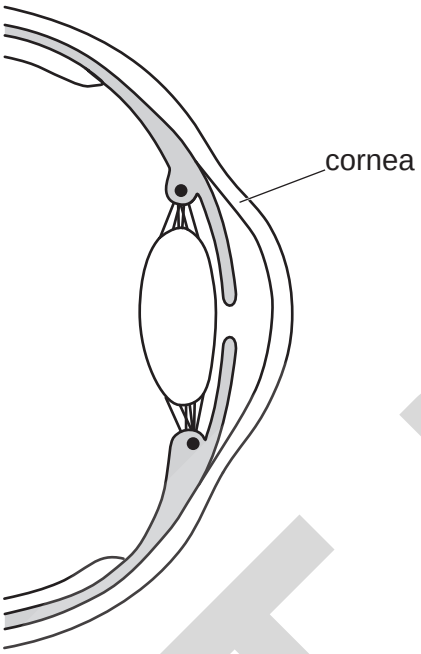

Fig. 3.1

(a) **(i)** State the term used to describe what happens to light as it passes from the air into the cornea.

..... [1]

(ii) Describe **and** explain the changes that occur in the eye when adjusting focus from a **distant** object to a **near** object.

.....

.....

.....

.....

.....

.....

..... [3]

www.root19.com +91 - 9969 353 301

(b) Rods and cones are the receptors in the retina of the eye.

(i) Describe the functions of rods and cones in the eye.

.....

.....

.....

.....

.....

.....

.....

.....

..... [4]

www.root19.com +91 - 9969 353 391

(ii) Fig. 3.2 is a photograph showing regions of a human retina, as viewed through the pupil at the front of the eye.

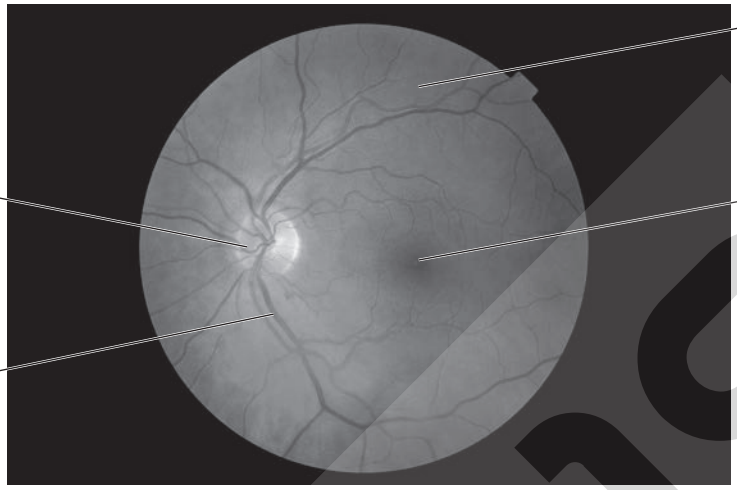

Fig. 3.2

Complete Table 3.1 to show the distribution of rods and cones across the retina.

Use these words to complete the table, each word may be used once, more than once or not at all:

many **few** **none**

Table 3.1

receptor	distribution across the retina		
	peripheral retina	blind spot	fovea
rods			
cones			

[3]

www.root19.com +91 - 9969 353 301

(c) Colour blindness can be caused by a mutation in a gene. The gene is located on the X chromosome.

Fig. 3.3 is a pedigree diagram of a family which has several people who are colour-blind.

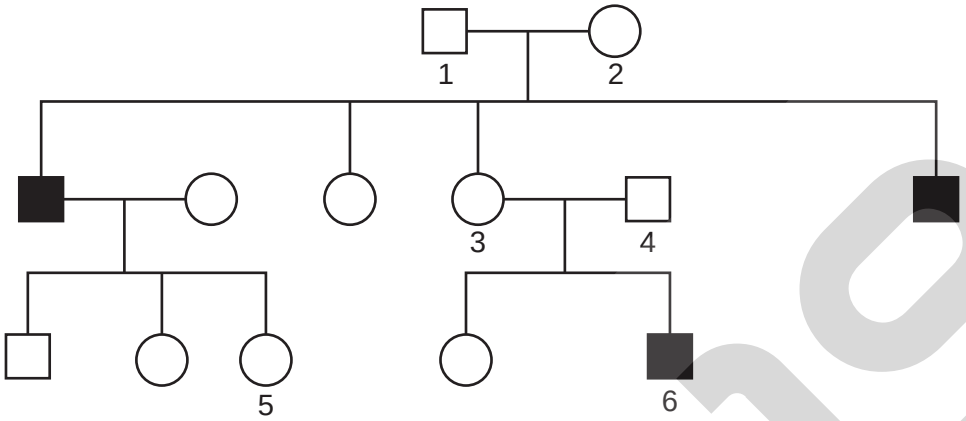

Key:

female with normal colour vision

male with normal colour vision

male with colour blindness

Fig. 3.3

(i) Colour blindness is sex-linked.

State the evidence from Fig. 3.3 that supports the idea that colour blindness is sex-linked.

.....

.....

..... [1]

(ii) State the genotype of person 5.

Use the symbols X and Y for the sex chromosomes and **A** for the dominant allele and **a** for the recessive allele of the gene for colour blindness.

..... [2]

www.root19.com +91 - 9969 353 391

(iii) Use the information in Fig. 3.3 to complete the genetic diagram to show the probability of person **3** and person **4** having another child with colour blindness.

	person **3**		person **4**
parental phenotypes	female with normal colour vision		male with normal colour vision
parental genotypes	.....		.....
gametes	◯ ◯	+	◯ ◯

offspring genotypes .....

offspring phenotypes .....

probability of a child having colour blindness .....
[5]

[Total: 19]

root 19

www.root19.com +91 - 9969 353 301

4 Fig. 4.1 is a diagram of a virus.

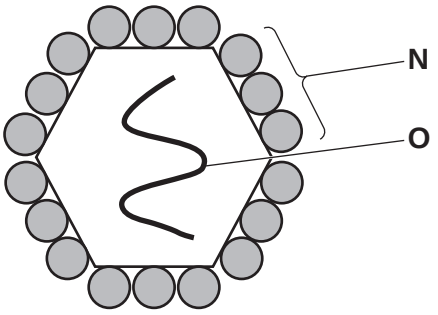

Fig. 4.1

(a) Identify the parts of the virus labelled **N** and **O**.

N .....

O .....
[2]

(b) The human immunodeficiency virus (HIV) infects and destroys lymphocytes.

The number of lymphocytes in the blood of a person infected with HIV was measured over a period of 84 months.

The results are shown in Fig. 4.2.

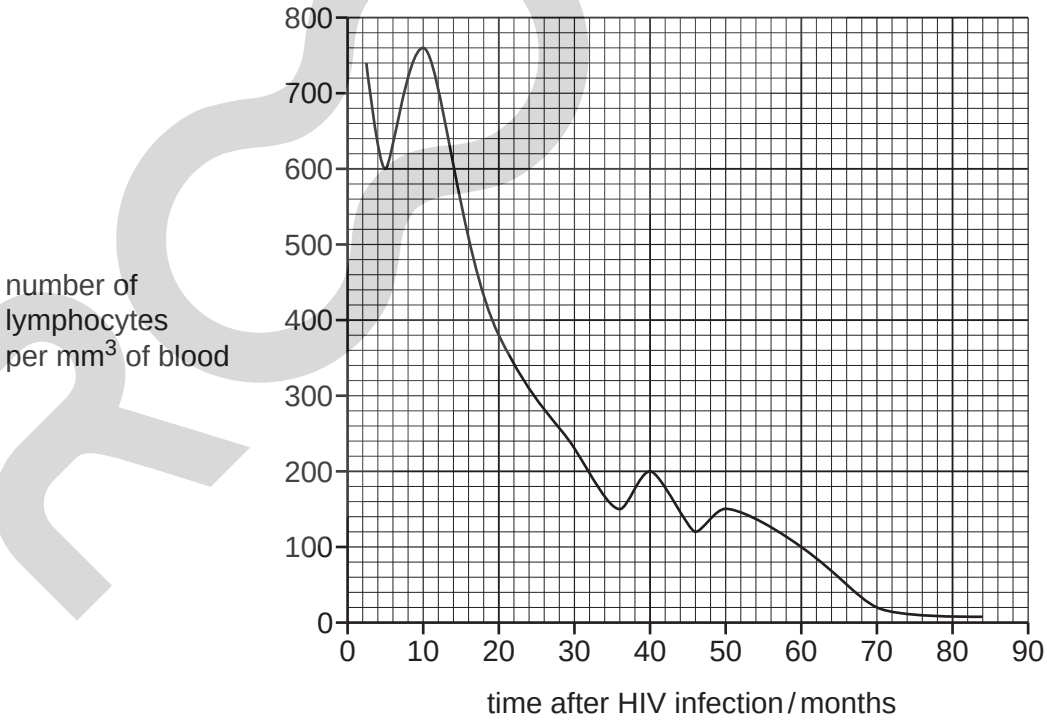

Fig. 4.2

www.root19.com +91 - 9969 353 391

(i) Use the information shown in Fig. 4.2 to calculate the percentage change in the number of lymphocytes from month 10 to month 60.

Give your answer to **two** significant figures.

Space for working.

.....%
[3]

(ii) Describe the changes in the number of lymphocytes, over the 84 months following infection with HIV, shown in Fig. 4.2.

.....

.....

.....

.....

..... [2]

(iii) Outline the consequences of the changes in the number of lymphocytes for the health of the person infected with HIV.

.....

.....

.....

.....

.....

.....

.....

.....

..... [4]

© UCLES 2022
www.root19.com

+91 - 9969 353 301

(iv) Explain why antibiotics are **not** used to treat viral infections.

.....

.....

.....

.....

..... [2]

[Total: 13]

5 Fig. 5.1 is a diagram of the human gas exchange system.

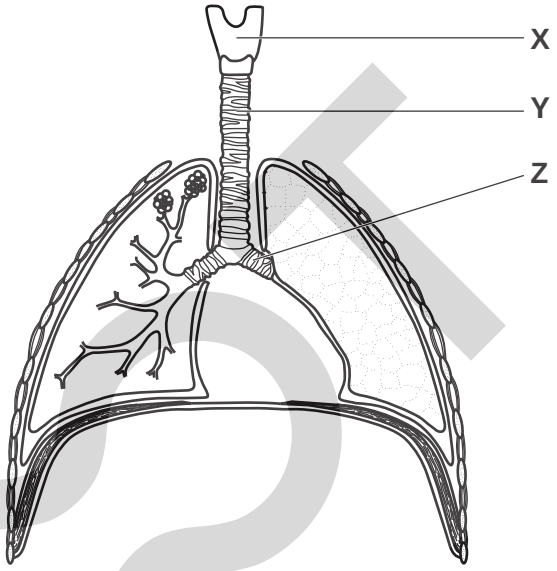

Fig. 5.1

(a) **(i)** Identify the parts of the gas exchange system labelled **X**, **Y** and **Z** in Fig. 5.1.

X .....

Y .....

Z .....

[3]

(ii) State the name of the tissue that prevents the collapse of **Y** and **Z** during breathing.

..... [1]

www.root19.com +91 - 9969 353 391

(b) Breathing involves the movement of the ribs and the diaphragm.

Describe the process of **inspiration**.

.....

.....

.....

.....

.....

.....

.....

.....

..... [4]

(c) State the name of the gas exchange surface in the lungs.

..... [1]

[Total: 9]

© UCLES 2022

www.root19.com
+91 - 9969 353 301

6 Coral reefs are important ecosystems.

(a) Complete the sentence about ecosystems.

An ecosystem can be defined as a unit containing the ..... of organisms and their ....., interacting together.

[2]

Fig. 6.1 is a photograph of a coral reef.

Fig. 6.1

(b) Fig. 6.2 is part of a food web for a coral reef ecosystem which is similar to the one shown in Fig. 6.1.

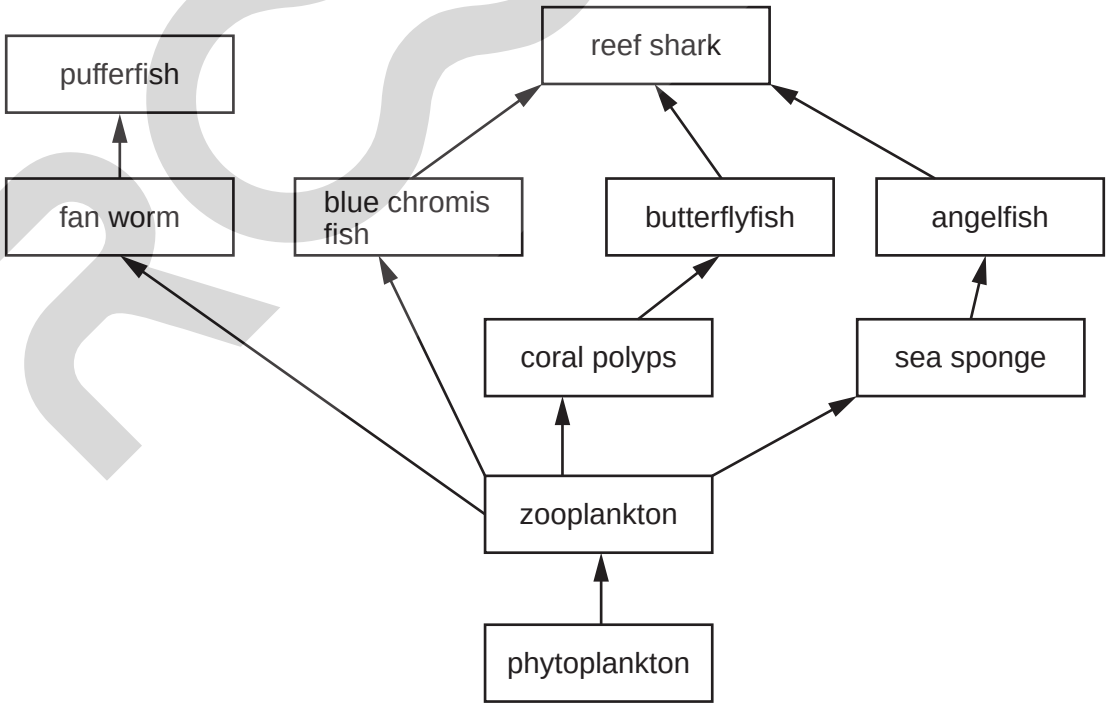

Fig. 6.2

(i) State the number of secondary consumers shown in Fig. 6.2.

..... [1]

(ii) State the name of a species that feeds at more than one trophic level in Fig. 6.2.

..... [1]

(iii) State the number of different organisms in the shortest food chain in Fig. 6.2.

..... [1]

(iv) State the evidence from the food web in Fig. 6.2, that phytoplankton are producers.

..... [1]

(v) It is rare for there to be more than five trophic levels in an ecosystem.

Explain what limits the number of trophic levels in food webs.

.....

.....

.....

.....

.....

.....

..... [3]

(c) One threat to aquatic ecosystems, such as coral reefs, is global climate change.

Discuss the threats to aquatic ecosystems, **other** than climate change.

.....

.....

.....

.....

.....

.....

..... [3]

[Total: 12]

© UCLES 2022
www.root19.com

+91 - 9969 353 391

BLANK PAGE

© UCLES 2022
www.root19.com

+91 - 9969 353 391

BLANK PAGE

© UCLES 2022
www.root19.com

+91 - 9969 353 391

BLANK PAGE

Permission to reproduce items where third-party owned material protected by copyright is included has been sought and cleared where possible. Every reasonable effort has been made by the publisher (UCLES) to trace copyright holders, but if any items requiring clearance have unwittingly been included, the publisher will be pleased to make amends at the earliest possible opportunity.

To avoid the issue of disclosure of answer-related information to candidates, all copyright acknowledgements are reproduced online in the Cambridge Assessment International Education Copyright Acknowledgements Booklet. This is produced for each series of examinations and is freely available to download at www.cambridgeinternational.org after the live examination series.

Cambridge Assessment International Education is part of Cambridge Assessment. Cambridge Assessment is the brand name of the University of Cambridge Local Examinations Syndicate (UCLES), which is a department of the University of Cambridge.